REV.	DATE	DESCRIPTION
NC	11/02/05	INITIAL RELEASE

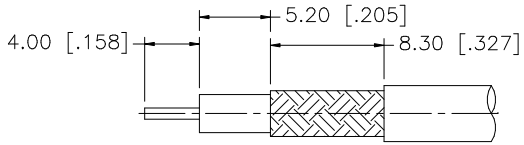

RECOMMENDED
CABLE STRIPPING DIM'S

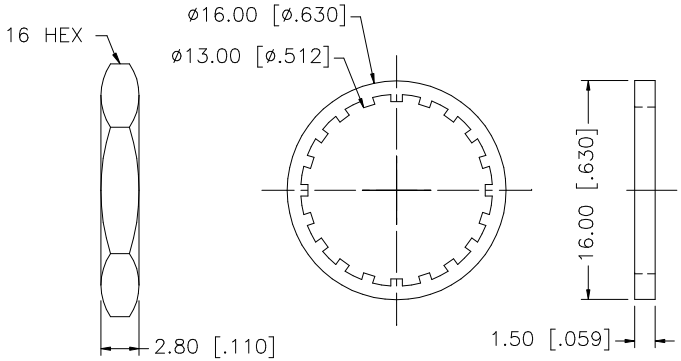

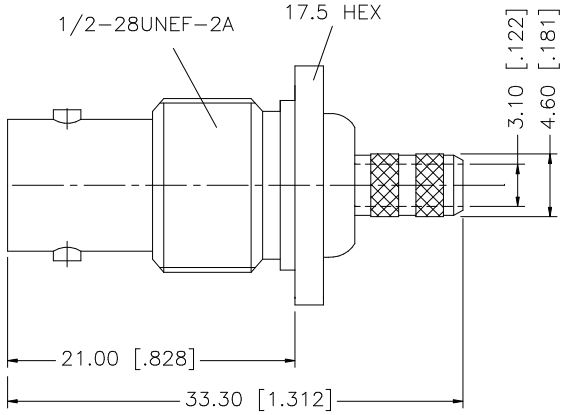

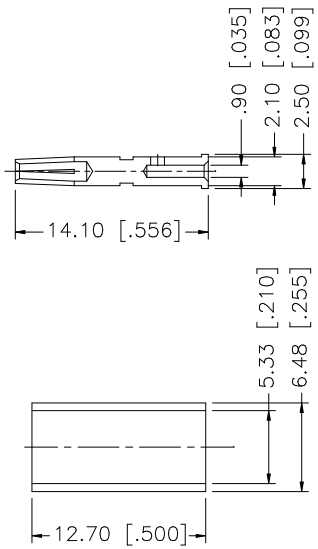

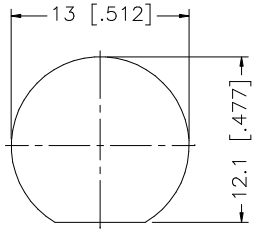

RECOMMENDED
MOUNTING HOLE

CRIMP NOTES:

1. CRIMPED FERRULE
   HEX CRIMP SIZE .213"
2. CRIMPED CONTACT PIN
   HEX CRIMP SIZE .068"

	DESCRIPTION	MATERIAL	FINISH	QTY
9				
8				
7	FERRULE	COPPER	NICKEL	1
6	HEX NUT	BRASS	NICKEL	1
5	LOCK WASHER	BRASS	NICKEL	1
4	GASKET	RUBBER	RED	1
3	CONTACT PIN	PHOS. BRONZE	GOLD	1
2	INSULATOR	TEFLON	NATURAL	1
1	BODY	BRASS	NICKEL	1

UNLESS OTHERWISE SPECIFIED DIMENSIONS ARE IN MILLIMETERS. DIMENSIONS IN [ ] ARE IN INCHES AND FOR CUSTOMER REFERANCE ONLY.

UNLESS OTHERWISE SPECIFIED TOLERANCES FOR MILLIMETERS ARE:
0.5 – 8mm ± 0.20mm
8 – 30mm ± 0.40mm
30 – 120mm ± 0.50mm

UNLESS OTHERWISE SPECIFIED TOLERANCES FOR INCHES ARE:
.020 – .315 = ± 0.007"
.315 – 1.180 = ± 0.015"
1.180 – 4.724 = ± 0.020"

DO NOT SCALE DRAWING

APPROVALS		DATE
DRAWN	G.R.S.	11/02/05
CHECKED		
ISSUED		
SHEET	1 OF 1	
CAD FILE	C:/112/112210.DWG	

Amphenol Connex

PART DESCRIPTION
BNC BULKHEAD CRIMP JACK
(FOR RG58/U, 141/U CABLE)

PART NO. 112210

DWG. NO. 112210.DWG | REV. NC | SIZE A | SCALE NA